MAYTONI
DECORATIVE LIGHTING

Instruction

C084CL-15W4K-D-W

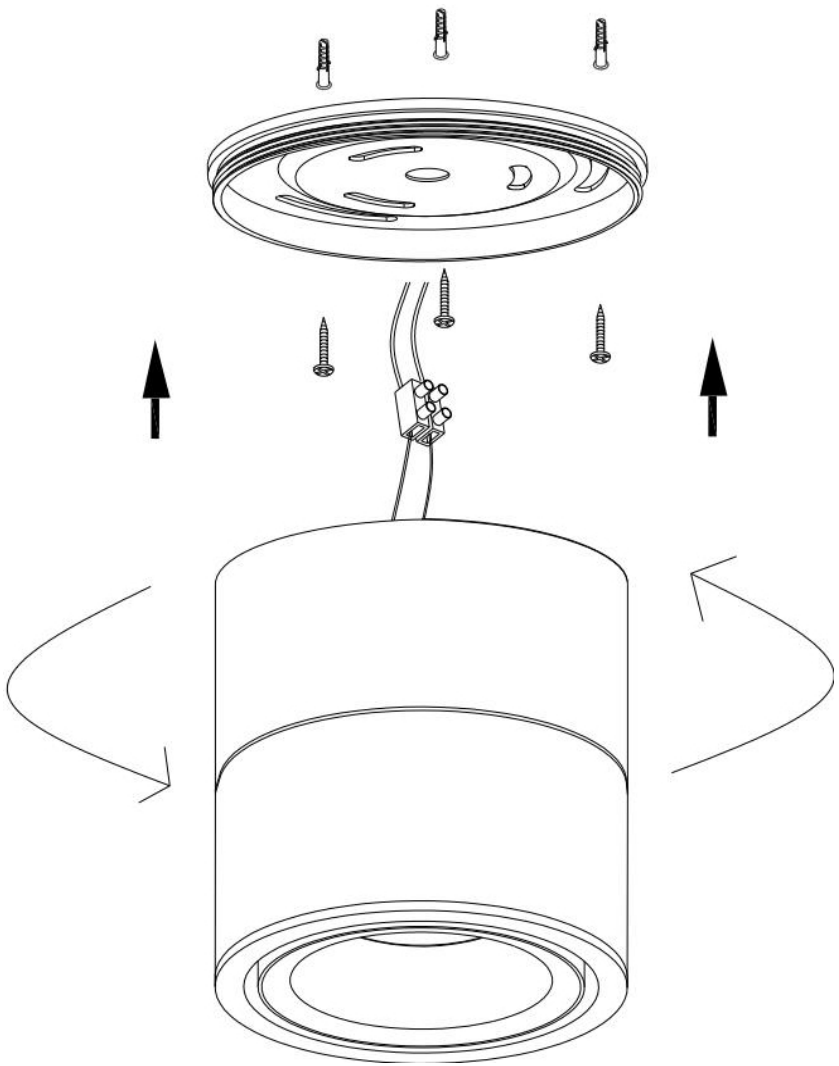

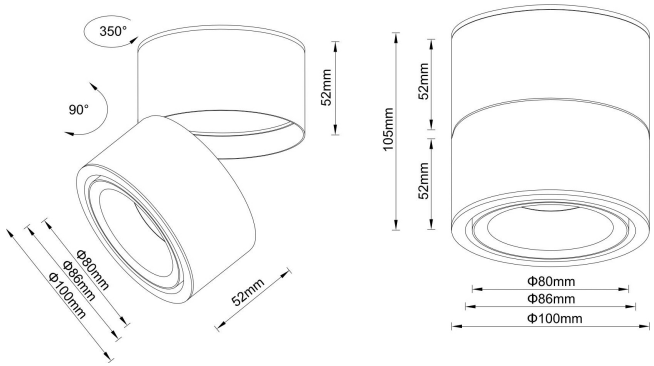

LED

MAX 15W
880 Lumen

Model: C084CL-15W4K-D-W
Collection: Ceiling & Wall
Series: Yin
Ceilling Lamps